SERVICE REPAIR

MANUAL

Hyster F160 (J30XMT J35XMT J40XMT) Forklift

HYSTER

INTRODUCTION

GENERAL

This section has the checks, adjustments and repair procedures for the parts of the electrical system that are NOT part of the EV-100LX motor controller. This section also does NOT include the electrical components covered in other sections such as motors and battery indicators. This section applies to the electric SitDrive® models such as the J30-40XM. To check, adjust or repair the parts of the motor controller see the section, **EV-100LX MOTOR CONTROLLER, 2200 SRM 460.**

See the section **BATTERY INDICATORS, 2200 SRM 138** to adjust the battery indicator. See the section **INSTRUMENT PANEL INDICATORS AND SENDERS, 2200 SRM 143** to check and replace the other instrument panel indicators and the senders. See the section **THE DC MOTOR MAINTENANCE, 620 SRM 294** for maintenance of the motors. See the section **THE INDUSTRIAL BATTERY, 2240 SRM 1** for information on the battery.

NOTE: This section does NOT include any components of any of the motor controllers. Many of the components in this section do have inputs to the EV-100LX motor controllers, but are not part of the controller.

⚠ WARNING

Do not operate a lift truck that needs adjustment or repairs. Report the need for adjustment or repairs immediately. If adjustment or repair is necessary, put a "DO NOT OPERATE" tag in the operator's area. Remove the key from the key switch.

Some of the checks and adjustments are done with the battery connected. Never have any metal on your fingers, arms or neck. These metal items can accidentally make an electrical connection and cause an injury.

Some components that have inputs to the controller have installation adjustments. This section has the correct procedures for replacement, checks and adjustment of these components. These components include the following:

1. Key Switch
2. Accelerator Switch Assembly
3. Stop Light Switch
4. Seat Switch
5. Switch for Optional Seat Brake
6. Parking Brake Switch
7. Direction (FWD REV) Switches
   Monotrol Pedal
   Direction Control (on Steering Column)
8. Hydraulic Cut Off Switch
9. Brake Fluid Switch
10. Motor Temperature Switches
11. Rocker Switches for Lights
12. Lights and Reverse Alarm
13. Horn and Horn Button
14. Printed Circuit Boards

⚠ WARNING

Before doing any tests and adjustments, raise the drive wheels off the floor and block the lift truck. See HOW TO PUT A LIFT TRUCK ON BLOCKS, in either the OPERATING MANUAL or the PERIODIC MAINTENANCE, 8000SRM528.

NOTE: Some checks and adjustments are difficult to do unless another person can operate the controls. When working alone, put a weight in the seat to close the seat switch. If your lift truck has a seat brake, release the seat brake when the operator in not in the seat. Put the voltmeter in a position so that you can see it from the operator area. You can usually operate the controls with your hand and also make the voltage measurements.

DESCRIPTION

INSTRUMENT PANELS

There are two instrument panel displays available on these lift trucks:

- a standard display that gives the operator basic information about the operation of the lift truck and
- a premium display that also includes diagnostic capabilities and performance settings.

Standard Display (See FIGURE 1)

When the key is first turned to the **"ON"** position, a start program will cause each indicator light to illuminate to

show that the light is good. This instrument panel has the following components:

1. **Hourmeter.** The hourmeter display shows the operating time of 0000 to 9999 hours. The time for the traction circuit is shown for four seconds after the lift truck has been operating and the key is turned to the **"OFF"** position.

2.**Voltmeter.** This battery indicator has a green, yellow and red band to indicate the voltage of the battery. The battery must have a current draw (load) to check the battery charge. Hold the tilt lever in the tilt BACKWARD position and look at the indicator. If the needle is in the red band, charge the battery. Operating the lift truck with the needle in the red band can decrease battery life. Continued operation with a discharged battery can damage the battery, motors or the contactors.

3.**Warning light, parking brake indicator.** The red light is **"ON"** when the parking brake is applied and the seat switch is closed. and goes **"OFF'** when the parking brake is released.

4.**Warning light, brake fluid reservoir is low.** The red light is **ON** for approximately three seconds when the key switch is turned to the **"ON"** position and must go **"OFF"** during operation. If the warning light is **"ON"** during operation, the brake fluid level in the reservoir is too low.

5.**Warning light, fasten seat belt.** The red light is **"ON"** for eight to ten seconds after the key switch is turned to the **"ON"** position.

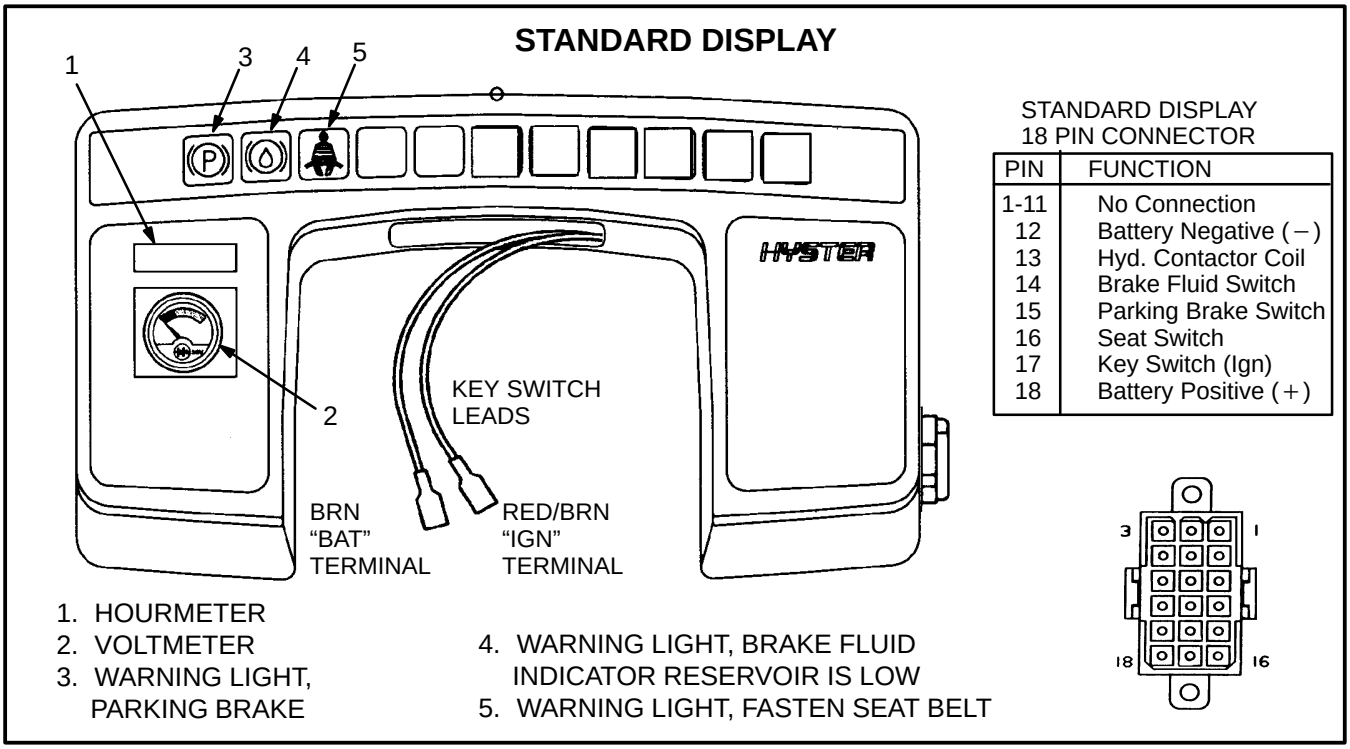

FIGURE 1 – INSTRUMENT PANEL DISPLAY AND PLUG CONNECTOR

Premium Display (See FIGURE 2)

When the key is moved to the **"ON"** position, a start program will cause each warning and indicator light to illuminate to show that the indicator is operating. This instrument panel has the following functions:

1. **Status Code Indicator.** This indicator is blank when the lift truck is operating correctly. The status codes and the hourmeter values are shown on this four-digit LED display. When a fault occurs, the status code will be shown with a dash (–) in the left digit position.

The hourmeter display shows the operating time of 0000 to 9999 hours. The time for the traction circuit is shown for four seconds after the lift truck has been operating and the key is turned to the **"OFF"** position. The indicator lights for the traction motor (5) and for the hourmeter (8) will also be illuminated during this time. If there is an SCR control card for the hydraulic pump motor, this time

will then be shown on the hourmeter for another four seconds. The indicator lights for the hydraulic motor (6) and for the hourmeter (8) will also be illuminated during this time.

2. **Warning Light, Parking Brake Indicator.** The red light is **"ON"** when the parking brake is applied and the seat switch is closed, and goes **"OFF"** when the parking brake is released.

If the parking brake is not applied and the operator leaves the seat or turns the key to the **"OFF"** position, a warning buzzer will make a noise for approximately 10 seconds.

3. **Warning Light, Brake Fluid Reservoir is Low.** The red light is **"ON"** for approximately three seconds when the key switch is turned to the **"ON"** position and must go **"OFF"** during operation. If the warning light is **"ON"** during operation, the brake fluid level in the reservoir is too low.

4. **Warning Light, Fasten Seat Belt.** The red light is **"ON"** for eight to ten seconds after the key switch is turned to the **"ON"** position.

5. **Warning Light, Motor Brushes are Worn.** When the sensor for brush wear closes, this warning light and the indicator light for the motor that has the problem will both illuminate.

PREMIUM DISPLAY

PREMIUM DISPLAY
18 PIN CONNECTOR

PIN	FUNCTION
1	Traction Card PY 5
2	Pump Card PY 5
3	Traction Card PY 1
4	Traction Card PY 2
5	Traction Card PY 3
6	Pump Card PY 1
7	Pump Card PY 2
8	Pump Card PY 3
9	Traction Card PY 4
10	Pump Card PY 4
11	No Connection
12	Battery Negative
13	Park Brake Switch
14	Brake Fluid Switch
15	Lift Interrupt
16	Seat Switch Input
17	Key Switch (Ign)
18	BDI Positive

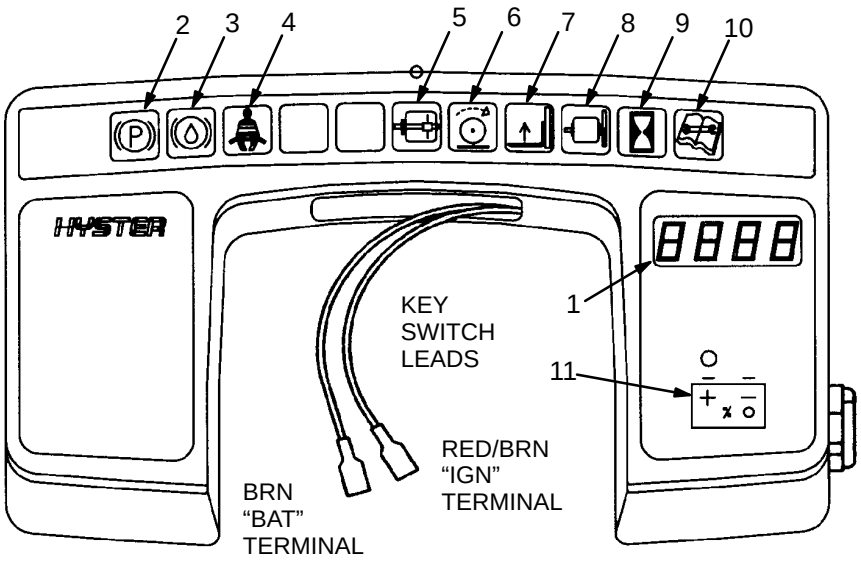

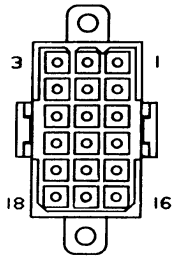

1. STATUS CODE INDICATOR
2. WARNING LIGHT, PARKING BRAKE INDICATOR
3. WARNING LIGHT, BRAKE FLUID RESERVOIR IS LOW
4. WARNING LIGHT, FASTEN SEAT BELT
5. WARNING LIGHT, MOTOR BRUSHES ARE WORN (TRACTION OR LIFT PUMP)
6. INDICATOR LIGHT, TRACTION MOTOR
7. INDICATOR LIGHT, LIFT PUMP MOTOR
8. WARNING LIGHT, MOTOR TEMPERATURE OVER LIMIT (TRACTION OR HYDRAULIC)
9. INDICATOR LIGHT, HOURMETER
10. WARNING LIGHT, SERVICE INTERVAL
11. INDICATOR LIGHT, BATTERY

FIGURE 2 – INSTRUMENT PANEL DISPLAY AND PLUG CONNECTOR

Thanks very much for your reading,

Want to get more information,

Please click here, Then get the complete manual

JustClickHere

NOTE:

If there is no response to click on the link above, please download the PDF document first, and then click on it.

Have any questions please write to me:
admin@servicemanualperfect.com

6. **Indicator Light, Traction Motor.** This light will illuminate with another warning light if a fault occurs in the traction motor. Example: If the brush wear sensor is activated in the motor, the warning light, brush wear (7) will go **"ON"** and the indicator light for the traction motor will show which motor has the problem.

7. **Indicator Light, Hydraulic Motor.** This light will illuminate with another warning light if a fault occurs in the hydraulic pump motor. Example: If the temperature over limit switch closes in the motor, the warning light, motor temperature over limit (10) will go **"ON"** and the indicator light for the hydraulic motor will show which motor has the problem.

8. **Warning Light, Motor Temperature Over Limit.** The traction motor and the hydraulic pump motor have thermal switches inside the motors. When the temperature increases to the limit set by the manufacturer of the motor, the thermal switch closes and the warning light on the instrument panel display illuminates. The indicator light for traction motor (8) or for the hydraulic motor (9) will show which motor has the problem. The travel speed will also be decreased.

9. **Indicator Light, Hourmeter:** When the hourmeter indicator is illuminated, the status code will display the operating time of the lift truck. The hourmeter indicator lamp is illuminated for four seconds after the key has been turned **"OFF".** If there is an hourmeter for the hydraulic pump motor, it will display for another four seconds.

10. **Indicator Light, Fault:** The fault indicator light will flash if the control card senses a symptom or a malfunction with the lift truck. A status code number will appear on the digital display of the status code indicator. The status number will be preceded by a dash (–) in the left digit position.

11. **Indicator Light, Battery Function:** The battery function indicator will flash when the status code indicator reads 19 (battery is approximately 70% discharged). The lift pump circuit will be disabled at a display of 10 (approximately 80% discharged).

PRINTED CIRCUIT BOARDS

There are two printed circuit boards used to control some of the electrical and hydraulic functions of the lift truck. The steering angle control board is located in the rear compartment and the lift pump control board, for the hydraulic control circuit, is located above and behind the hydraulic control valve.

The lift pump control board has been designed with test points to provide for easy checking of the different electrical circuits controlled by the printed circuit board.

Steering Angle Control Board (See FIGURE 3)

The steering angle board is located in the rear compartment. It is installed with the components facing downward over the steering axle assembly. Optical switches on the steering angle control board are used to determine steering angle. In addition, separate functions relative to lift pump operation and lift interrupt (contactor controlled lift pump motor only) are controlled. An internal voltage regulator allows dual voltage operation (36 or 48 volts).

The steering angle board performs several functions:

1. Monitors steering angle and supplies input to the SCR traction control for drive motor cutout and reversal during turns. Signals are generated to indicate left or right, and 60¿ or 90¿ turns.

Optical switches are mounted on the steering angle board. and an interrupter (shade) is mounted to the steering axle assembly to sense steering angle.

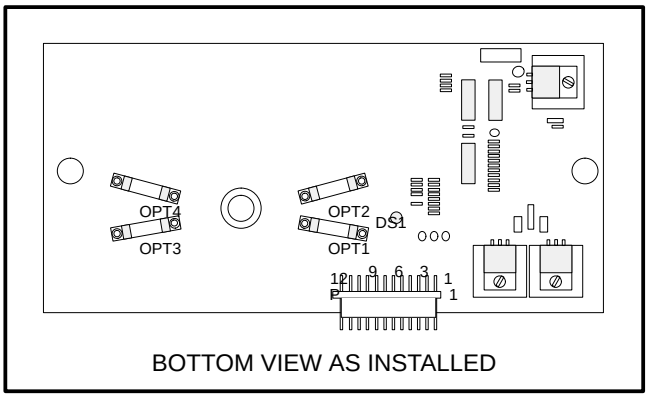

FIGURE 3 – STEERING ANGLE CONTROL BOARD

2. Energizes the lift pump contactor, when signaled by the lift pump control board. (Contactor controlled lift pump motor only.)

The optical switches on the lift pump control board supply an input to the steering angle board. A portion of the steering angle board is used to process

signals from the lift pump control board. Outputs from the steering angle board connect tothe lift pump contactor coil. The lift pump contactor is energized when the drivers (electronic relays) in the steering angle board complete the circuit on the negative side of the coil.

3. Provides protection against shorted pump contactor coils.
(Contactor controlled lift pump motor only.)

If the current draw of a lift pump contactor coil is excessive, the output driver will turn off to protect the steering angle board. Normal operation is automatically restored when the short is removed.

4. Provides lift interrupt when the signal from the traction SCR card (PA2) is removed.
(Contactor controlled lift pump motor with lift interrupt option only.)

Lift Pump Control Board (See FIGURE 4)

The lift pump control board is located above the hydraulic control valve. Optical switches on the lift pump control board are utilized to sense the position of the hydraulic control valve levers. These optical switches take the place of conventional mechanical switches. When a hydraulic control lever is moved from the neutral position, the corresponding optical switch is shaded (the light path is interrupted) and the lift pump is activated. Optical switches are shaded (the lift pump is activated) during all functions except lower. An internal voltage regulator allows dual voltage operation (36 or 48 volts). The optical switches are used to control both lift pump control options:

a. Single speed lift pump motor
(Contactor controlled)

b. SCR controlled lift pump motor

1. On the contactor controlled lift pump, the optical switches on the lift pump control board are connected to the steering angle control board. A portion of the steering angle control board is used to process signals from the lift pump control board. The steering angle control board is connected to the lift pump contactor coil. The lift pump contactor is energized when the steering angle control board completes the circuit on the negative side of the coil. As a separate function, the steering angle control board is used to monitor steering tire angle and supply inputs to the traction control.

With the single speed lift pump, one contactor is used to control the lift pump motor. Outputs from the logic circuit are used to energize the lift pump contactor.

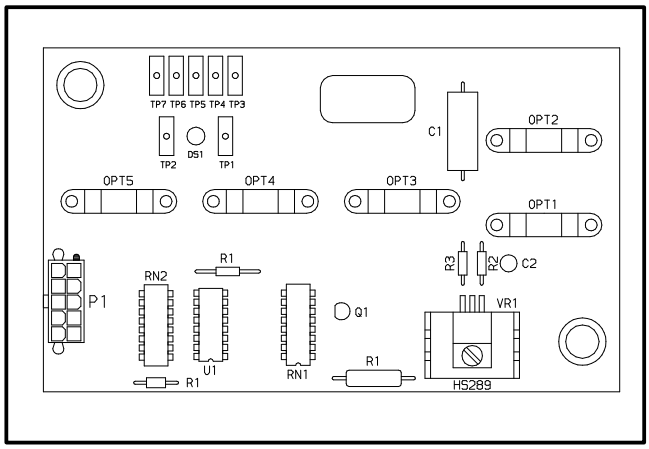

FIGURE 4 – LIFT PUMP CONTROL BOARD

2. With the SCR controlled lift pump option, the optical switches on the lift pump control board are connected to the TB terminals on the lift pump SCR card. When a hydraulic lever is activated and an optical switch is shaded, the voltage at the corresponding TB terminal is dropped to less than 2 volts and the lift pump starts. Four separate pump speeds are provided with the SCR controlled lift pump:

a. Slow lift and fourth function (auxiliary # 2)

b. Fast lift

c. Tilt

d. Third function (auxiliary # 1)

OTHER CONTROL COMPONENTS

Following is a short description of the other control components and their function:

- Key switch is in the housing of the instrument panel and connects battery voltage to all of the control circuits except the horn.
- Accelerator switch assembly is actuated by the Monotrol pedal or accelerator pedal and is part of the SRO circuit. If the accelerator switch assembly is closed before the seat switch, the controller will not permit the lift truck to move.
- Stop light switch is actuated by the brake pedal to energize the stop lights on the rear legs of the overhead guard.

- Seat switch is inside the seat and is open if the operator is not on the seat. The seat switch sends a signal to the control card for operation of the SCR controller and the power steering.
- If the lift truck has a seat brake, the seat switch sends a signal to the seat brake solenoid, which is mounted to the front of the cowl. The solenoid operates the seat brake linkage and applies the parking brake if the operator leaves the lift truck without applying the parking brake.
- Parking brake switch operates if the parking brake is applied. The parking brake switch is fastened near the linkage for applying the parking brake. The switch sends a signal to the control card of the instrument panel to illuminate the parking brake indicator.

  The parking brake switch and the control card of the instrument panel are also used to operate an alarm. The alarm sounds if the operator leaves the seat of the lift truck when the key is in the **ON** position and the parking brake is not applied.
- Direction control switches in the Monotrol pedal or steering column send battery voltage to the control card to close the forward or reverse contactors.
- Brake fluid switch sends voltage to the indicator light in the instrument panel when the fluid in the brake master cylinder is low.
- Optional motor temperature switches send voltage to the indicator light in the instrument panel when either the lift pump or the traction motor is too hot.
- Optional brush wear indicators send voltage to the indicator light in the instrument panel when the brushes of either the lift pump or traction motors are worn.
- Rocker switches for lights control all the optional lights on the lift truck.
- The standard rear lights on the legs of the overhead guard are similar to automobile rear lights. The stop lights come on when the brake pedal is depressed. The reverse lights come on when traveling in reverse. If there are also driving lights installed, the tail lights come on with the driving lights. A flashing light at the top of the overhead guard and the reverse alarm are optional.
- •The horn switch at the center of the steering wheel operates the horn located under the cowl cover.

REPLACEMENT

⚠ WARNING

ALWAYS disconnect the battery and remove the key before replacing components.

The capacitor in the SCR controller can hold an electrical charge after the battery is disconnected. To prevent electrical shock and injury, discharge the capacitor before inspecting or repairing any component in the rear compartment. Wear safety glasses. Make certain the battery has been disconnected. Use a screwdriver or jumper wire to discharge capacitors C1. Block the drive wheels.

NOTE: None of the electrical components of this section can be repaired. All bad components must be replaced.

INSTRUMENT PANEL COMPONENTS

NOTE: The only replaceable parts of these instrument panels are the O-ring seal, key switch and the wires to the switch.

Instrument Panel Assembly

Each of the two instrument panel assemblies, standard and premium, can be replaced as a unit.

Follow this procedure to replace an instrument panel:

1. Disconnect the battery and remove the key.

2. Remove the front steering column cover with the instrument panel assembly attached. Carefully disconnect the 18 pin connector, the key switch wires and, on the standard panel, the two pin connector from inside the column cover.

3. Remove the four screws that fasten the instrument panel to the column cover.

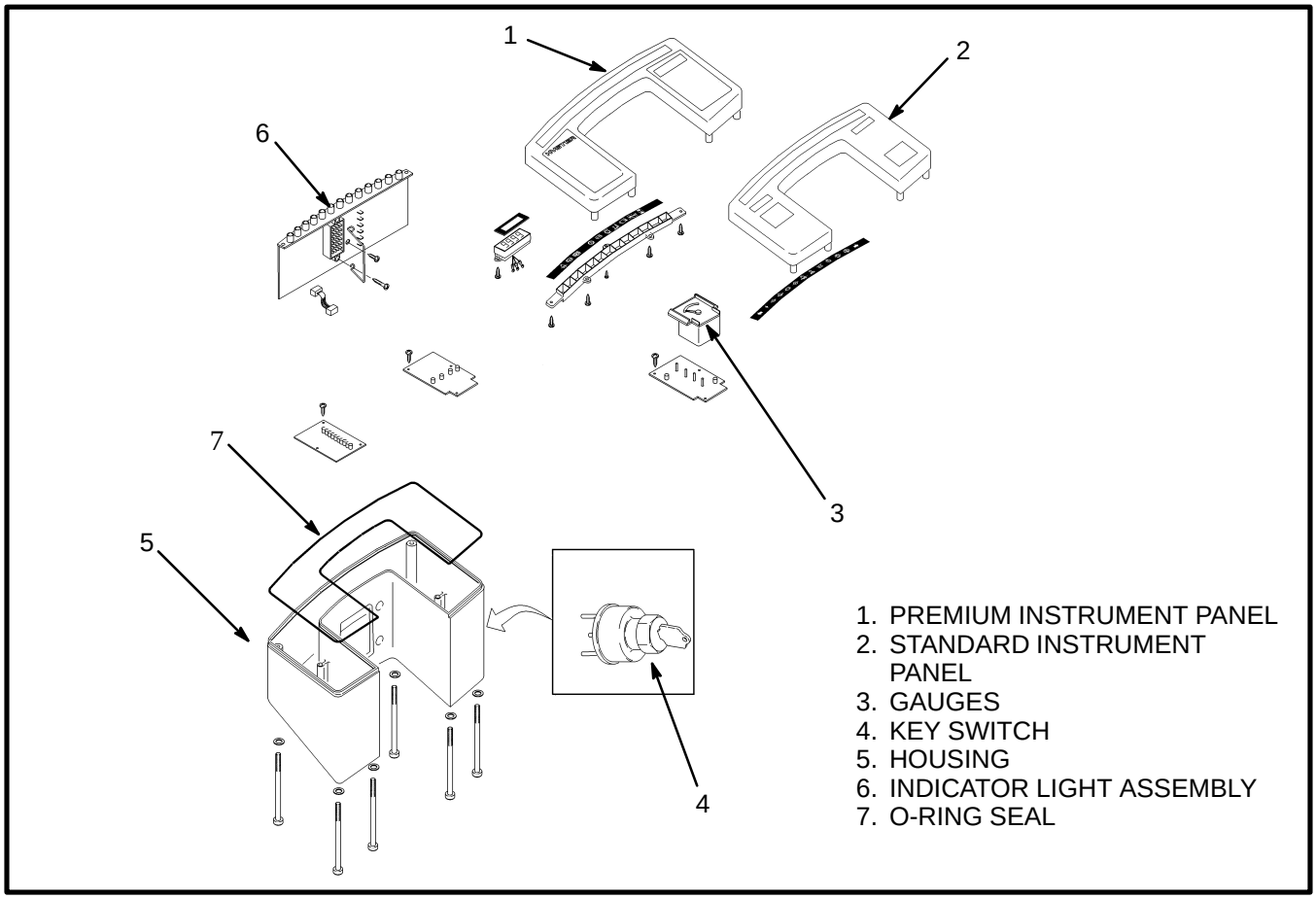

FIGURE 5 – INSTRUMENT PANELS

4. Install the replacement panel assembly to the cover of the steering column and tighten the screws. Install the connectors and the key switch wires. On the standard panel, set the DIP switches near the connector for the panel to the voltage of the lift truck. See FIGURE 6. Move the DIP switch for the correct voltage to the up position and all others to the down position. Install the column cover on the steering column.

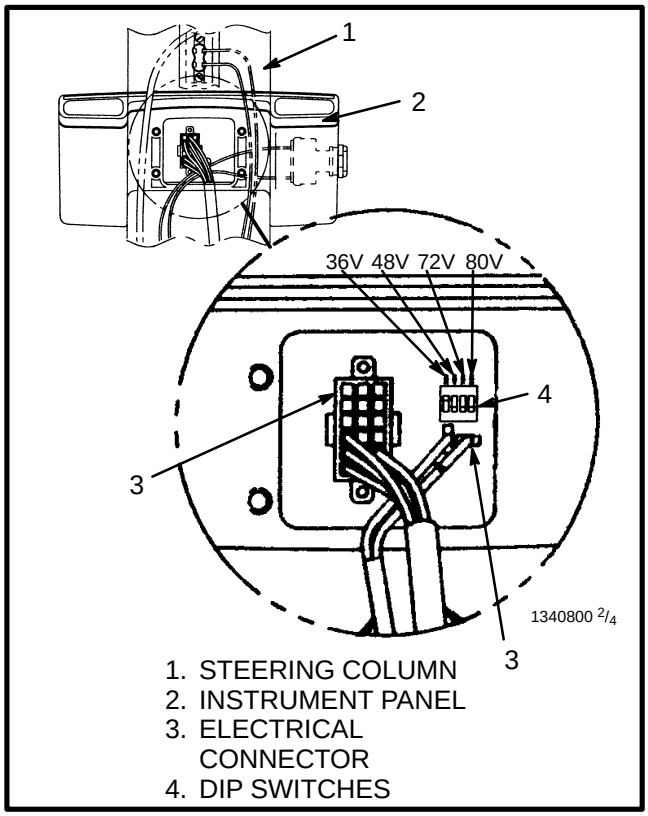

FIGURE 6 – DIP SWITCHES

Key Switch (See FIGURE 7)

Replace the key switch as follows:

1. Disconnect the battery and remove the key.

2. Remove the eight screws from the bottom of the housing that fasten the bezel of the instrument panel. The hourmeter is fastened to the bezel with the electrical connector on the circuit board inside the housing. Carefully lift the bezel up off the housing without damaging the O-ring seal. Disconnect the three wire connector for the hourmeter.

3. Remove the nut that fastens the key switch. See FIGURE 7. Remove the key switch from the housing. Make a note of which wires are on which terminals and disconnect the wires. Install the wires on the same terminals of the replacement switch.

4. Align the notch in the shaft housing of the key switch with the tab in the housing of the instrument panel. Install the replacement switch. Tighten the nut and connect the wires.

5. If necessary, install a new O-ring. Make sure the O-ring is in the groove of the bezel, connect the hourmeter plug (standard only) and carefully install the bezel on the housing.

6. Install and tighten the eight screws that fasten the bezel using a cross pattern.

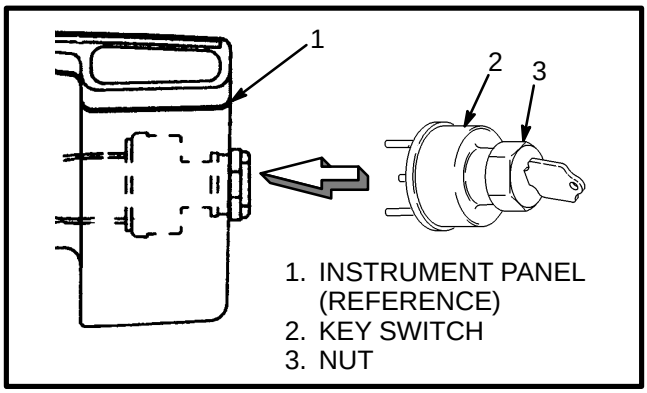

FIGURE 7 – KEY SWITCH

Battery Indicators

There are two types of battery indicators for these trucks. One type is a meter movement with colored bands showing the battery charge (standard panel). The other type is a light emitting diode (LED) display with LEDs of different colors showing battery charge (performance panel). The battery indicators cannot be replaced. Replace the instrument panel if the battery indicator is bad. See Instrument Panel Assembly of this section. See the section **BATTERY INDICATORS, 2200 SRM 138** to adjust these battery indicators.

Hourmeter (Standard Panel Only)

This hourmeter is not replaced. Replace the instrument panel if the hourmeter is bad. See Instrument Panel Assembly of this section.

Digital Display (Premium Panel Only)

NOTE: The only replaceable parts of the premium instrument panel are the O-ring seal, key switch and the wires to the switch. If the digital display is bad, replace the instrument panel. See Instrument Panel Assembly of this section.

Indicator Lights

NOTE: The indicator lights of the standard instrument panel and the LED indicators of the performance panel are not replaced. If the indicator lights or LED indicators are bad, replace the instrument panel. See Instrument Panel Assembly of this section.

PRINTED CIRCUIT BOARDS

Steering Angle Control Board

⚠ WARNING

The capacitor in the SCR controller can hold an electrical charge after the battery is disconnected. To prevent electrical shock and injury, discharge the capacitor before inspecting or repairing any component in the rear compartment. Wear safety glasses. Make certain the battery has been disconnected. Use a screwdriver or jumper wire to discharge capacitors C1. Raise the drive wheels.

Disconnect the battery. Remove the key from the key switch. Raise the drive wheels off of the floor. Refer to the section **PERIODIC MAINTENANCE 8000 SRM 528**. To gain access to the steering angle control board remove the rear compartment cover. The rear compartment cover is removed by loosening the two retaining screws and lifting the cover off of the counterweight.

1. Remove the two wing nuts retaining the steering angle control board cover and remove the cover. See FIGURE 8.

2. Remove the two nuts and washers retaining the printed circuit board to the mounting bracket.

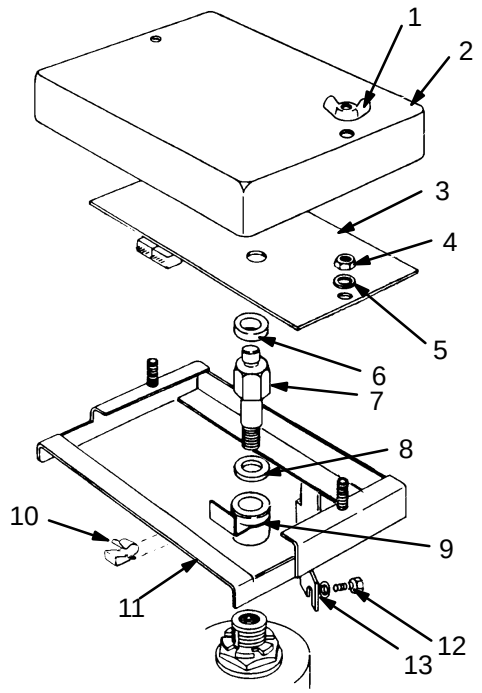

1.	NUT	7.	BOLT
2.	COVER	8.	WASHER
3.	P.C. BOARD	9.	INTERRUPTER
4.	NUT	10.	CLIP
5.	WASHER	11.	BRACKET
6.	WASHER	12.	SCREW
		13.	WASHER

FIGURE 8 – STEERING ANGLE CONTROL BOARD MOUNTING

3. Disconnect the plug to the printed circuit board and remove the printed circuit board.

4. Visually check to see that the interrupter is positioned properly. The interrupter should be 90° to the center line of the steer tire. If necessary loosen the bolt retaining the interrupter and adjust the interrupter. Tighten the bolt to retain the interrupter. Align the printed circuit board with the washer and bolt retaining the interrupter to the steering axle and the bolts on the mounting bracket. Install the two washers and nuts to secure the board to the bracket.

5. Connect the plug to the printed circuit board.

6. Install the cover and the wing nuts. Install the rear compartment cover. Lower the drive wheels to the floor. Connect the battery.

Lift Pump Control Board

Disconnect the battery. Raise the drive wheels, refer to the section **PERIODIC MAINTENANCE, 8000 SRM 528**. To gain access the lift pump control board, remove the hydraulic control valve lower cover. See FIGURE 14.

1. To replace the printed circuit board, remove the cotter pins retaining the lower links to the hydraulic control valve. Remove the clevis pins and swing the levers up and out of the way.

2. Disconnect the connector to the lift pump control board.

3. Remove the two capscrews, washers, lockwashers and nut retaining the board to the valve bracket. Remove the printed circuit board.

4. Align the printed circuit board with the holes in the mounting bracket and install the two capscrews, washers, lockwashers and nuts to retain the board to the bracket.

5. Connect the plug from the main harness to the printed circuit board.

6. Lower the levers and install the clevis pins to retain the links to the hydraulic control valve. Install new cotter pins to retain the clevis pins.

7. Install the lower cover for the hydraulic control valve. Lower the drive wheels to the floor. Connect the battery.

Whenever the printed circuit board is replaced the vane settings must be checked for proper alignment. Refer to section, **MAIN CONTROL VALVE, 2000 SRM 576.**

OTHER CONTROL COMPONENTS

Accelerator Switch Assembly (See FIGURE 9)

The accelerator switch assembly is a switch fastened to the cowl. The accelerator switch assembly is linked to the Monotrol pedal or accelerator pedal. This switch assembly is in the normally open position when the pedal is in the UP position. The switch assembly operates as soon as the pedal starts to move, for an input to the control card to energize the traction motors. Replace the accelerator switch assembly as follows:

1. Disconnect the battery and remove the key.

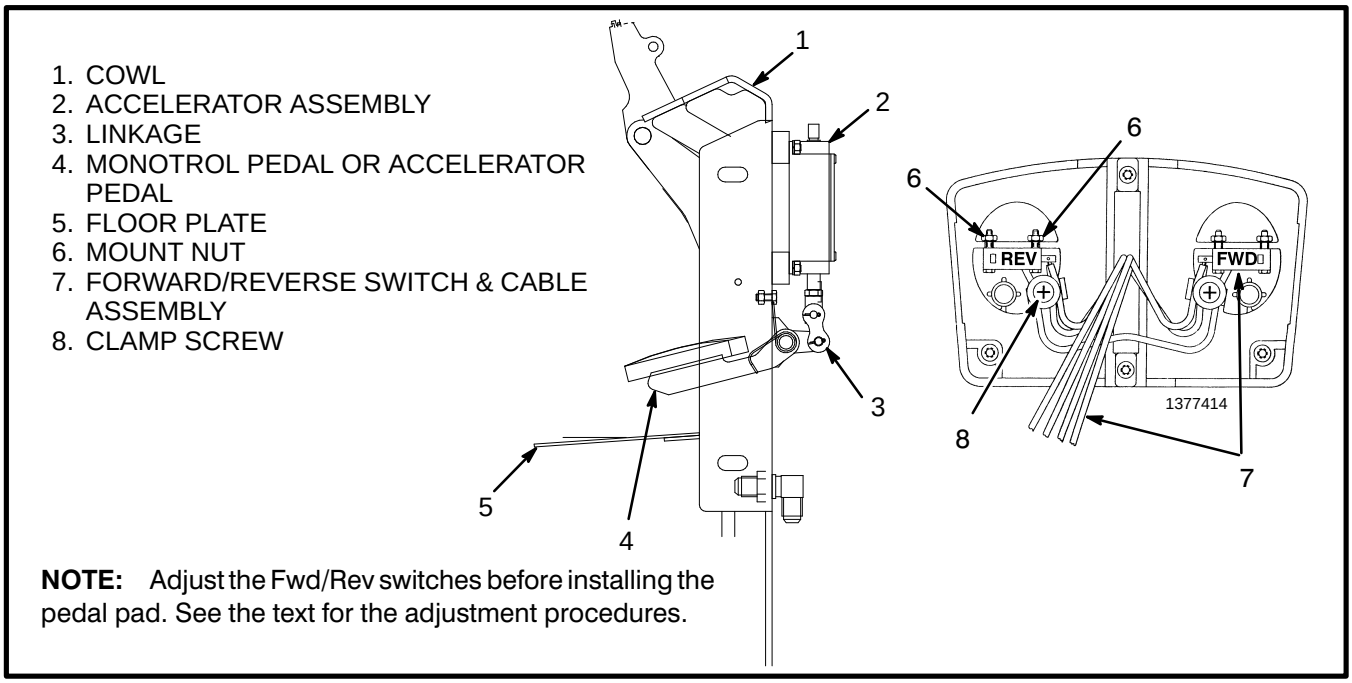

FIGURE 9 – MONOTROL PEDAL OR ACCELERATOR PEDAL POSITION, AND MONOTROL FWD./REV. SWITCHES REPLACEMENT AND ADJUSTMENT

2. Remove the floor plates and the cowl cover. The accelerator switch assembly is under the cowl cover on the front of the cowl. See FIGURE 9.

3. Disconnect the six pin connector from the main harness. Remove the cotter pin retaining the lower clevis pin to the accelerator or Monotrol pedal arm assembly. Remove the two mount screws, lockwashers, washers and nuts for the accelerator switch assembly. Remove the accelerator assembly.

Stop Light Switch

The stop light switch is a small switch fastened to the mount for the brake pedal assembly. This switch is normally open. The stop light switch is operated by the brake pedal to energize the stop lights on the rear legs of the overhead guard. These lights are standard on U.S. units and optional on European units. Replace the stop light switch as follows:

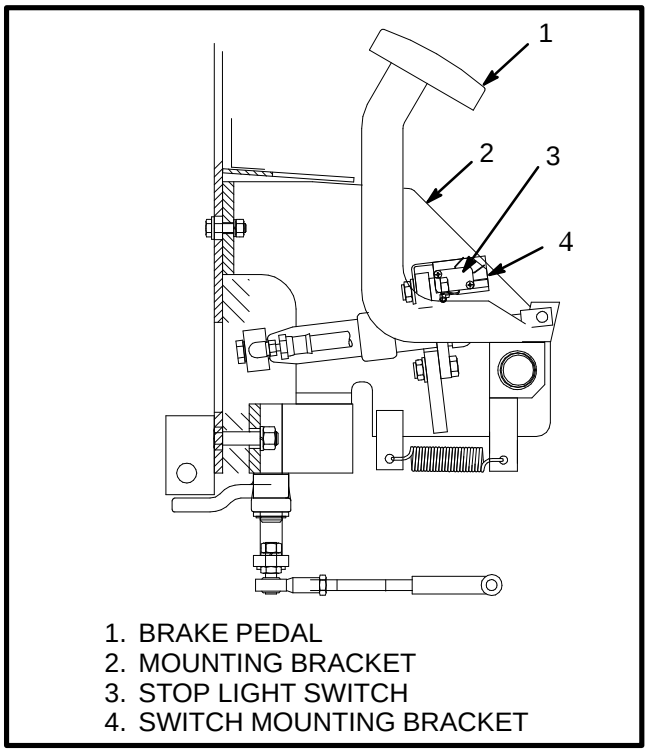

FIGURE 10 – STOP LIGHT SWITCH

1. Disconnect the battery and remove the key.
2. Remove the floor plates. The stop light switch is between the pedal arm and the mount for the brake pedal. See FIGURE 10.

3. Install tags on the wires of the stop light switch for correct connection during installation. Remove the wires, mount screws, nut plate and insulator for the switch.

4. Install the replacement switch in the same position. Do not bend or damage the actuator arm and roller of the switch during installation. Connect the wires as removed during removal.

5. Adjust the stop light switch as described in CHECKS AND ADJUSTMENTS. Install the floor plates.

Seat Switch

The seat switch has no adjustments. The seat switch is inside the cushion of the operator seat and must be replaced if it is damaged. The switch is normally open. Replace the seat switch as follows:

1. Disconnect the battery and remove the key.

2. Open the hood. Disconnect the connector for the seat switch wires near the rear of the hood frame. Push the connector through the grommet in the hood. It can be necessary to remove the grommet from the hole in the hood for enough clearance to get the connector through the grommet.

3. Remove the screws that fasten the seat to the hood and hood frame. Close and latch the hood and put the seat on its side for access to the seat switch.

4. Use a flat blade screwdriver or other tool with a flat blade to carefully lift the switch free of the seat pan. Slide the switch out of the seat cushion.

5. Carefully slide the replacement switch into the cavity of the seat cushion until the end of the switch with the wires is aligned over the hole in the pan. Push on the switch until the clips of the switch are fastened to the seat.

6. Carefully install the grommet over the wire connector. Install the seat on the hood and tighten the nuts. Install the grommet in the hole of the hood, connect the wire connector and push the connector back inside the hood frame.

Parking Brake Switch (See FIGURE 12)

The parking brake switch is fastened near the linkage for applying the parking brake. This switch operates the indicator in the instrument panel and the alarm through the control card for the instrument panel.

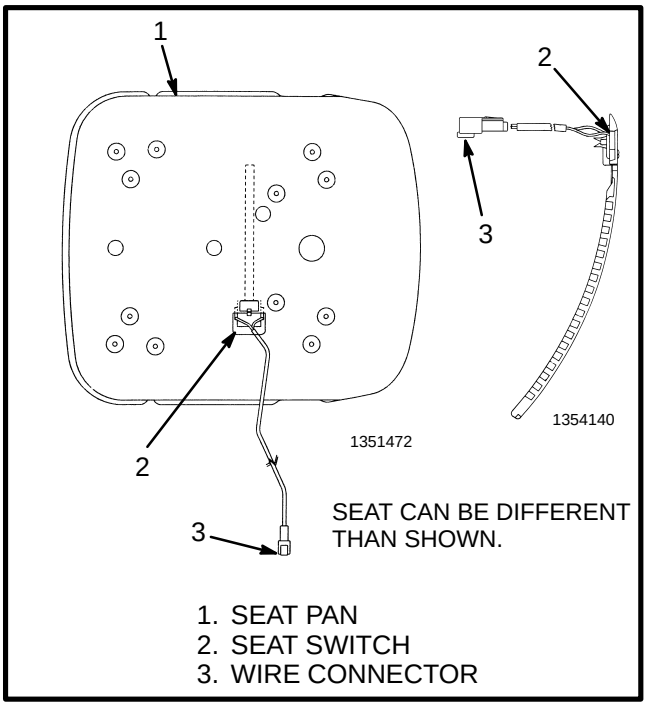

FIGURE 11 – SEAT SWITCH REPLACEMENT

The park brake alarm will operate for 10 seconds when the operator gets off the seat or the key is moved to the **"OFF"** position and the parking brake is not applied. The alarm is operated by the instrument panel from the switch signal and is located within the instrument panel housing. The alarm will not operate if the parking brake switch is damaged or not adjusted correctly. An alarm that does not operate cannot be repaired and must be replaced as part of the instrument panel. See Instrument Panel Assembly. Replace the parking brake switch as follows:

1. Disconnect the battery and remove the key.

2. Remove the cowl cover. Remove the nuts that fasten the switch to the plate assembly. Do not lose the nuts.

4. Install the replacement switch in the same position. Install the insulator, nut plate and mount screws. Do not bend or damage the actuator arm and roller of the switch during installation. Connect the wires as removed during removal.

3. Make a note of the wires fastened to the switch terminals for correct connection during installation. Remove the wires from the switch terminals.

4. Connect the wires to the replacement switch as disconnected during removal. Install the replacement switch using the same nuts. Do not damage the leaf of the switch during installation.

5. Install the cowl cover. Connect the battery.

6. Adjust the switch as described in CHECKS AND ADJUSTMENTS. Install the floor plates.

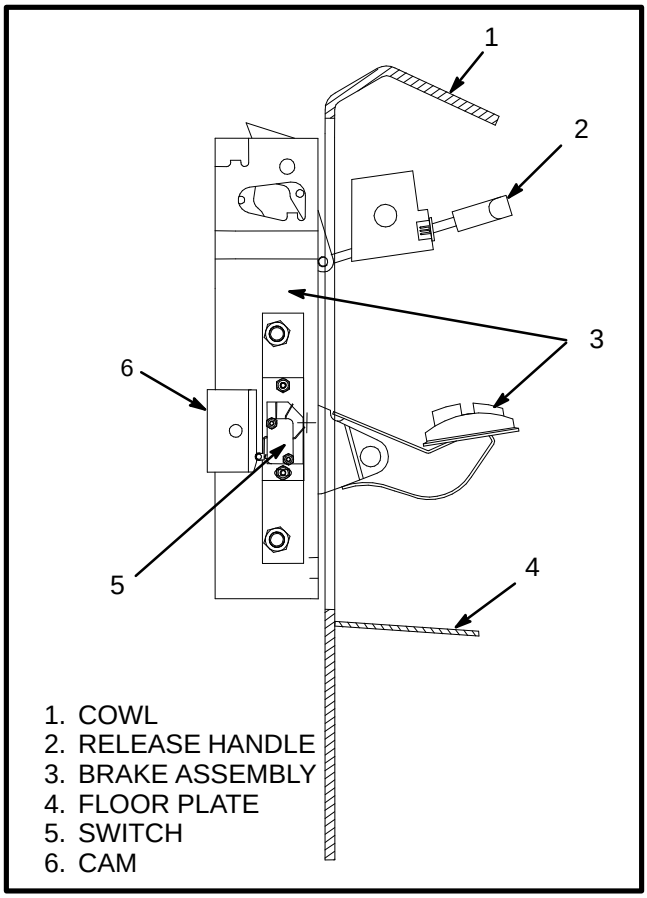

FIGURE 12 – PARKING BRAKE ASSEMBLY

Direction Switches (Monotrol Pedal) (See FIGURE 9)

There is a small direction switch under each pad of the Monotrol pedal. See FIGURE 9. Each switch controls one direction. If both sides of the Monotrol pedal are pushed at the same time, the direction circuit is deenergized. The contacts of the two direction switches are in a series and parallel arrangement so that both direction contactors cannot be energized at the same time.

NOTE: The direction switches used in the Monotrol pedal are made for Hyster Company with a special contact clearance and timing. Other switches made by the manufacturer look the same and will fit in the same space in the Monotrol pedal. These other switches will not operate the same and will often burn and not give good service. The switches are also replaced as an assembly that includes both switches and the wire cable with connectors. Use only replacement switches with the Hyster part number in the assembly.

Replace the direction switch assembly as follows:

1. Disconnect the battery and remove the key.

2. Remove the cowl cover. Make a note of the location of the wires for correct connection during installation. Disconnect the plug for the Monotrol pedal from the main harness.

3. Remove the two capscrews and washers retaining the pedal to the Monotrol pedal arm assembly. Cut the cable ties that fasten the switch harness wires to the arm assembly. Remove the pedal assembly.

4. Turn the pedal assembly upside down and remove the pedal pad by removing the four screws and lockwashers.

5. Remove the nuts that fasten the switches. Remove the screws and special washers that fasten the wires to the pedal. Remove the switch assembly from the pedal.

6. Install the replacement switch assembly on the pedal. Make sure that the forward switch with wire 8 is on the right of the back side of the pedal. The reverse switch with wire 6 is on the left of the back side of the pedal.

7. Temporarily install the nuts that fasten the switches, but do not tighten the nuts.

8. Align the wires as noted during removal. Put Loctite® 222 on the screws for the special washers that fasten the wires. Install the screws and washers and tighten the screws to 0.8 – 1.0 N•m (7.0 – 8.8 lbf in) torque.

9. Install cable ties as removed during removal.

10. Before installing the pedal pad adjust the direction switches as described in CHECKS AND ADJUSTMENTS. Tighten the nuts and install the pedal pad on the pedal after adjustments are complete.

11. Connect the switch harness to the main wiring harness as disconnected. Install the cowl cover.

12. Connect the battery.

Direction Control Switches (Steering Column) (See FIGURE 13)

The direction control switches send a signal to the traction control card to close the forward or reverse contactors. This direction control has a pair of small switches in the steering column. See FIGURE 13. Each position

of the two switches controls one direction. Both switches must function correctly because both switches are used to close the circuit. A bad switch must be replaced. Replace the switches as follows:

1. Disconnect the battery and remove the key.

2. Move the steering column to the forward position and remove the rear cover of the steering column for access to the switches.

3. Make a note of the location of the wires for correct connection during installation and disconnect the three wires from the switch. Replace the switch and connect the wires to the replacement switch.

4. There is no adjustment for these switches. Install the cover for the steering column.

5. Connect the battery.

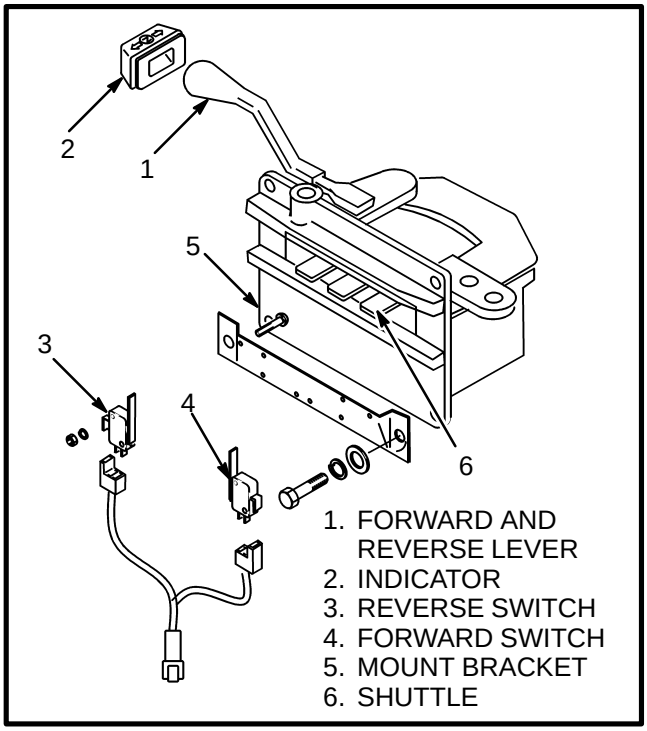

FIGURE 13 – DIRECTION CONTROL (FORWARD AND REVERSE) SWITCHES

Hydraulic Cut Off Switch

This switch prevents operation of the hydraulic controls if the hood is not closed and latched and the hydraulic control valve cover is not closed. The switch prevents the hydraulic printed circuit board from operating of any of the hydraulic controls. The contacts are open in the fault condition.

Replace the hydraulic cut off switch as follows:

1. Disconnect the battery and remove the key.

2. Remove the screws retaining the lower front hydraulic valve cover and remove the cover. Release and raise the upper hydraulic valve covers and levers.

3. Remove the two nuts and washers retaining the switch to the mounting bracket. Tag and disconnect the wires to the switch.

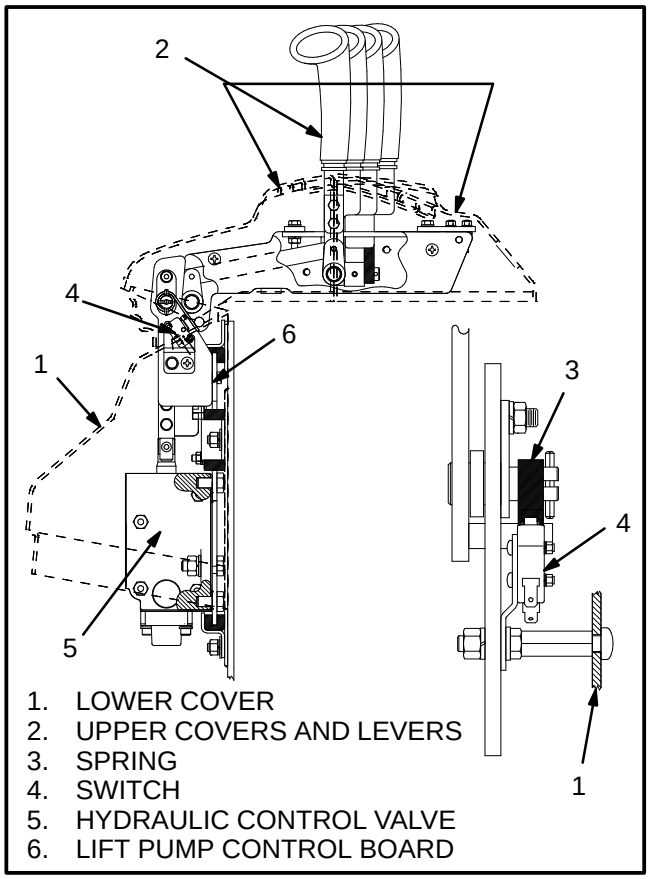

FIGURE 14 – HYDRAULIC CUT OFF SWITCH

4. Install the replacement switch on the screws located on the mounting bracket. Install the nuts and washers. .Do not bend or damage the actuator arm and roller of the switch during installation. Connect the wires as removed during removal.

5. Close the upper hydraulic valve covers and levers. Make certain that the spring on the valve linkage contacts the roller on the switch and that the switch closes and opens as the covers and levers are moved.

6. Install the lower front hydraulic valve cover.

7. Connect the battery.

Brake Fluid Switch

This switch is a magnetic switch on the reservoir of the master cylinder for the service brakes. It sends a signal

to the control card of the instrument panel to illuminate the indicator for low fluid level. The switch is part of the reservoir.

Motor Temperature Switches

These switches are in the traction and lift pump motors. The switches send signals to the pump SCR card or the TMM card, then to the traction card and then to the instrument panel. The signal will illuminate the indicator to tell the operator that the motor is too hot.

The temperature switch is part of the motor and cannot be replaced separately. However, they almost never go bad.

Rocker Switches for Lights (See FIGURE 15)

These switches are ON OFF switches that control the optional front, rear and operator compartment lights. Rocker switches for the optional lights are mounted to the instrument panel to the right of the steering column. Remove the cover under the instrument panel for access to the underside of the instrument panel or switch mounting surface. Replace a switch as described in the following paragraphs:

1. Disconnect the battery and remove the key.

2. Put tags on the switch wires, or wire harness for correct identification during installation. Remove the wires from the switch terminals.

3. Use a flat blade screw driver or other similar tool and press in on the retainer clips at each side of the switch. Remove the switch from the face of the instrument panel or switch mounting surface while holding the retainer clips in the "released" position.

4. Remove the switch and install the replacement switch in the panel. Make sure the switch is in the correct position for reading by the operator.

5. Connect the wires, or wire harness to the electrical terminals on the switch as removed during removal.

⚠ CAUTION

Make sure wire connectors do not touch other switch or meter terminal wire connectors, metal brackets or the bracket mounting nuts. Make sure there is no tension or binding on the wires or connectors.

6. Install the cover under the instrument panel.

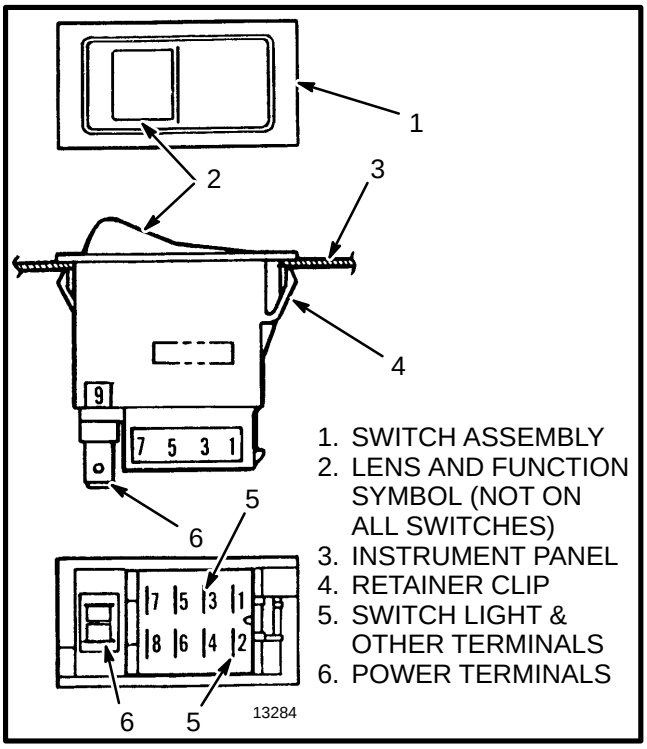

FIGURE 15 – ROCKER SWITCH

Lights and Reverse Alarm (See FIGURE 16 and FIGURE 17)

The Lights are all fastened to the overhead guard. The stop, tail and reverse light assemblies are on the rear legs of the overhead guard and are standard in North America and optional in Europe. These light sets operate on the voltage of the lift truck. The flashing light is fastened near the top of the overhead guard and is optional on all units. This light also operates on the voltage of the lift truck and is **"ON"** when the key is in the **"ON"** position. The rear driving light (optional) is also fastened near the top of the overhead guard. The optional front driving lights are fastened to the front legs of the overhead guard.

NOTE: It is not necessary to replace the complete light assemblies to replace a bulb. Do only the steps necessary for your replacement needs.

Replace the *Stop, Tail* and *Reverse* Light Assembly.

1. Disconnect the battery and remove the key.

2. To replace the bulb for the tail light part of the light assembly, remove the top screw and nut. Slide the stop light portion of the lens off of the lens assembly. Push and turn the bulb $^1/_4$ turn counterclockwise. Make sure you are replacing the correct bulb of the set. Make sure the replacement bulb is the correct voltage and has the correct pin configuration. Install the replacement bulb in the socket using the reverse procedure. Slide the tail light portion of the lens on the lens assembly. Install the screw and washer to retain the lens.

3. To replace the bulb for the reverse part of the light assembly, remove the lower screw and nut. Slide the reverse (clear) portion of the lens off of the lens assembly. Push and turn the bulb $^1/_4$ turn counterclockwise. Make sure you are replacing the correct bulb of the set. Make sure the replacement bulb is the correct voltage and has the correct pin configuration. Install the replacement bulb in the socket using the reverse procedure. Slide the reverse portion of the lens on the lens assembly. Install the screw and washer to retain the lens.

4. If the stop light bulb must be replaced, remove both the upper and lower screws and nuts. Carefully remove the lens assembly from the light base. Push and turn the bulb $^1/_4$ turn counterclockwise. Make sure you are replacing the correct bulb of the set. Make sure the replacement bulb is the correct voltage and has the correct pin configuration. Install the replacement bulb in the socket using the reverse procedure. Align the lens assembly with the base and install the two screws and nuts to retain the lens assembly to the base.

5. If the complete light assembly is being replaced, remove both screws and nuts and remove the light assembly with the lenses from the bracket. Disconnect the four pin connector.

6. Connect the plug of the new light assembly to the connector. Align the new light assembly in the bracket and install the two screws and nuts.

7. Connect the battery.

Replace the *Flashing Light* Assembly.

1. Disconnect the battery and remove the key.

2. Remove the two M4 screws, nuts and washers that attach the flashing light.

3. Remove the wire guard.

4. To replace a bulb *only*, remove the lens from the base. Carefully remove the bulb. Use a cloth to install the replacement quartz bulb **without** touching the bulb with your fingers. Go to Step 7 if the assembly will not be replaced.

5. If the complete light assembly is being replaced, disconnect the connector and remove the flashing light base from the mounting bracket by removing the mounting nut.

6. Align the new flashing light assembly in bracket on the lift truck and install the plug in the connector. Align the flashing light assembly on the base.

7. Install the two screws, nuts and washers to retain the flashing light and wire guard on the mounting bracket.

8. Connect the battery.

Replace the *Front* or *Rear Driving Light* Assemblies.

1. Disconnect the battery and remove the key.

2. Replace the bulb *only* by carefully moving the rubber housing away from the edge of the lens to get the light assembly out of the housing. Remove the socket assembly from the back of the light assembly. Turn the socket assembly $^1/_4$ turn counterclockwise. Push and turn the bulb $^1/_4$ turn counterclockwise. Make sure the replacement bulb is the correct voltage and has the correct pin configuration. Install the replacement bulb and socket assembly using the reverse procedure. Install the light assembly in the housing.

The Reverse Alarm is fastened to the right rear leg of the overhead guard. The alarm operates from signals received from the traction control card to let people know the lift truck is traveling in the reverse direction. See FIGURE 16.

Replace the reverse alarm as follows:

1. Disconnect the battery and remove the key.

2. Remove the rear compartment cover for access to the electrical plug of the alarm. Disconnect the square six pin plug for the alarm from the main harness.

3. Remove the two screws, nuts and washers retaining the alarm to the mounting bracket. Remove the reverse alarm. Make sure not to lose the two spacers that position the alarm in the bracket.

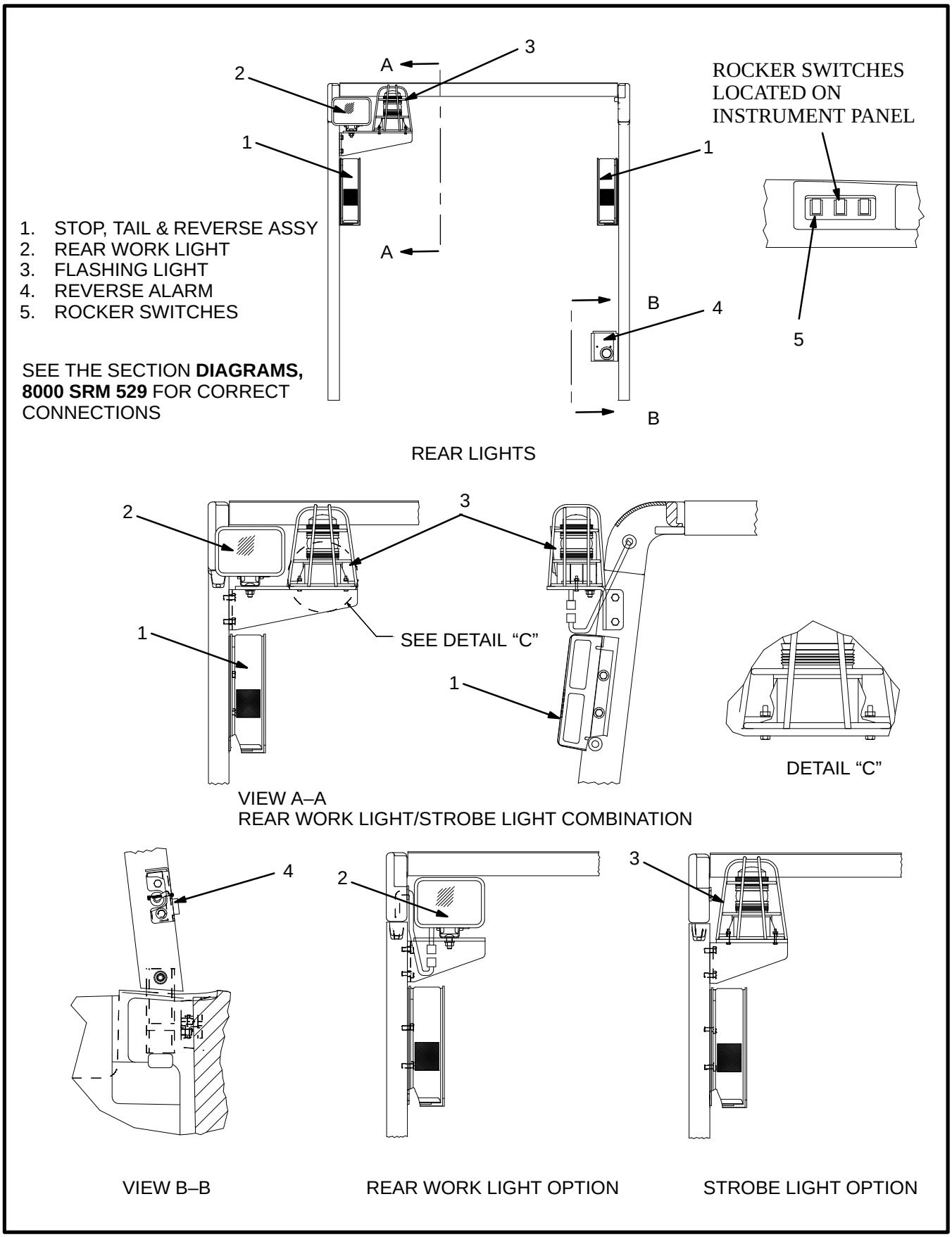

FIGURE 16 – REAR LIGHTS AND REVERSE ALARM

3. To remove the driving light assembly, disconnect the plug from the connector. Remove the nut that fastens the front or rear light assembly to the mounting bracket. Remove the light assembly .

4. Install the new driving light assembly on the lift truck bracket using the nut. Connect the plug of the light assembly to the connector on the leg of the overhead guard.

4. Align and install the spacers and replacement alarm on the bracket. Install the two screws, nuts and washers to retain the alarm to the bracket.

5. Connect the plug to the connector on the main harness located in the rear compartment. Install the rear compartment cover.

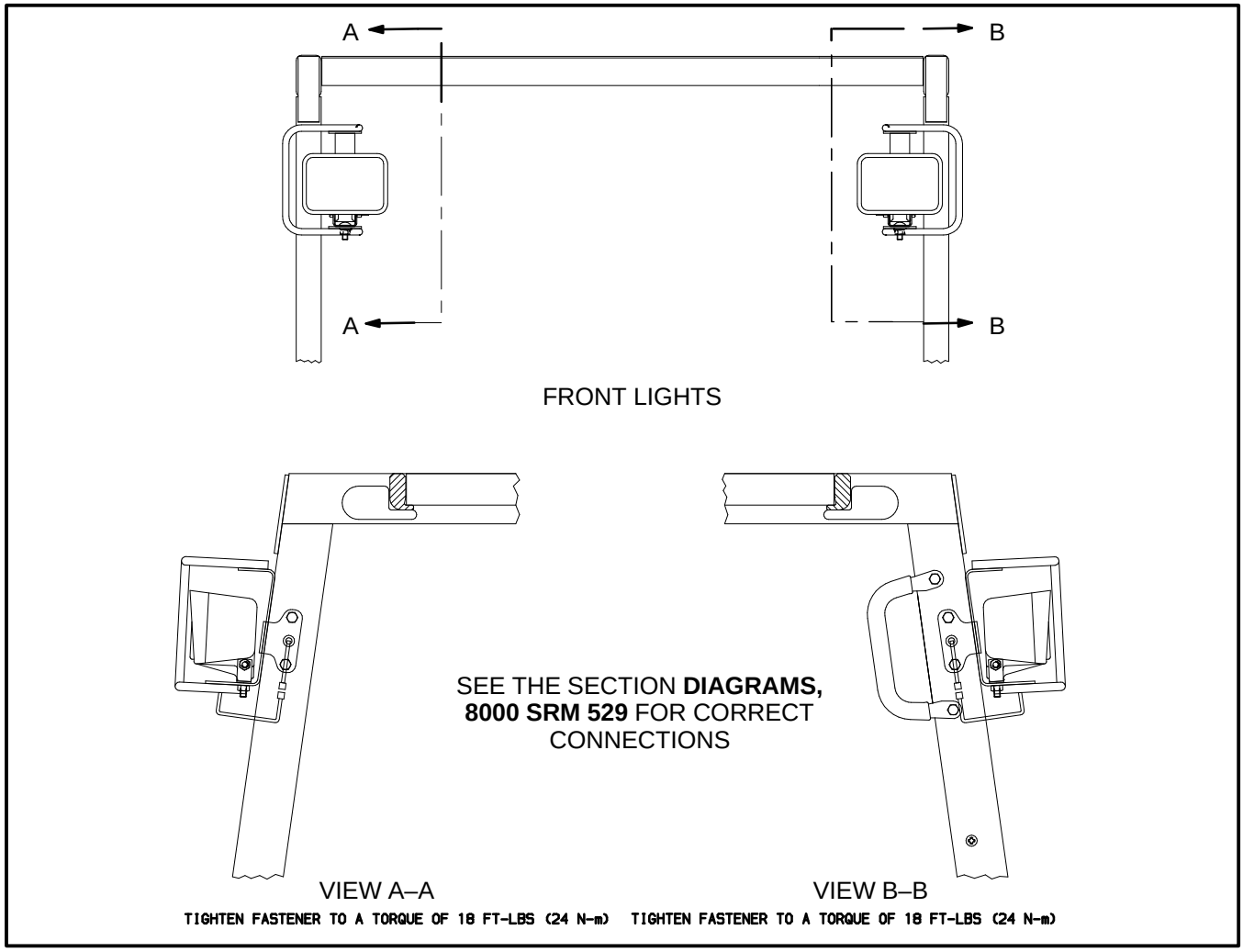

FIGURE 17 – OPTIONAL FRONT LIGHTS

Horn and Horn Button (See FIGURE 18)

The Horn is mounted on the cowl under the cowl cover. Replace the horn as follows:

1. Disconnect the battery and remove the key.

2. Remove the cowl cover by removing the four attaching screws.

3. Tag and disconnect the wires fastened to the horn terminals.

4. Hold the horn and remove the capscrew, nut, and washer that fasten the horn to the bracket welded to the lift truck cowl. Do not lose the parts. Remove the horn.

5. Align the horn assembly with the hole in the bracket welded to the lift truck cowl. Install the capscrew in the mounting hole and install lockwashers and the nut.

6. Align the horn in the same position as the old horn and tighten the capscrew and nut.

7. Install the wires on the horn terminals.

8. Install the cowl cover. Connect the battery.

The Horn Switch and Cover (button) is in the center of the steering wheel. See FIGURE 18. Replace the horn button assembly as follows:

1. Disconnect the battery and remove the key.

2. Carefully lift the cover and horn button assembly up off the steering wheel. Lift the assembly far enough for access to the setscrews that fasten the horn wires. There is some extra length of the horn wires, but the assembly will not come up very far. If necessary for additional clearance, the cover, contact plate and spring can be removed from the contact set.

3. Loosen the setscrews that fasten the contact set to the horn wires.

4. Pull the horn wires out of the contact set and remove the assembly.

⚠ WARNING

If the steering wheel has been removed, make sure the steering wheel nut has been tightened. The correct torque is 40 to 54 N•m (30 to 40 lbf ft).

5. Put the replacement assembly in position over the steering wheel and install the wires in the contacts. Tighten the setscrews to fasten the wires.

NOTE: If the contact set, spring, contact plate and cover are separated, make sure they are installed and aligned correctly.

6. Carefully push the wires into the shaft bore as far as possible. Align the horn button assembly and press down on the edges of the cover to install it in the steering wheel.

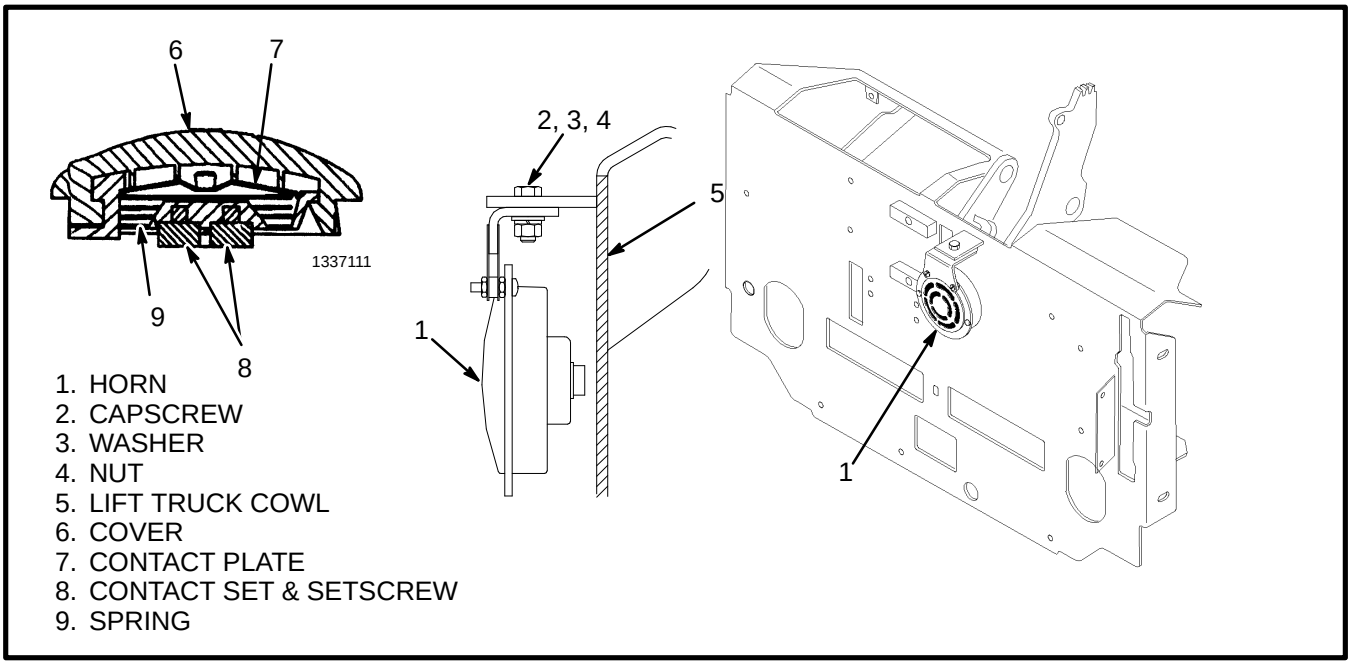

FIGURE 18 – HORN AND HORN BUTTON

CHECKS AND ADJUSTMENTS

⚠ WARNING

Some checks and adjustments in this section must be done with the battery connected and power applied to the controller. Lift truck movement during checks or adjustments can cause personal injury. Raise the drive wheels to prevent lift truck movement. Follow the instructions in the Operating Manual or the section PERIODIC MAINTENANCE, 8000 SRM 528 to raise the drive wheels.

Never have any metal on your fingers, arms or neck. These metal items can accidentally make an electrical connection and cause an injury.

ALWAYS disconnect the battery before making checks or adjustments that do not need power applied.

⚠ CAUTION

Correct meter polarity is necessary for some checks. Meter correct positive is indicated as (+). Meter correct negative is indicated as (–).

Use a meter with a minimum rating of 20,000 ohms per volt to make measurements. Most digital voltmeters are good.

CONTROL AND POWER FUSES (See FIGURE 19)

⚠ WARNING

Do not touch the terminals of capacitor C1 of the traction or lift motor controllers. The charge on the capacitors can cause electrical shock and personal injury. Disconnect the battery and use an insulated screwdriver or jumper wire to discharge the capacitors before connecting the voltmeter leads. Make a short-circuit across the capacitor terminals to discharge each capacitor and prevent electrical shocks.

The condition of fuses can normally be checked by looking at them. Some fuses do not change in appearance and must be checked with an ohmmeter. Disconnect the battery. Open the rear compartment cover and connect a jumper to the capacitors terminals to discharge the capacitors before checking fuses. Sizes and locations of the fuses are shown in FIGURE 19.

Replace all bad fuses. Check to see what caused the fuse to fail before replacing the rear compartment cover and connecting the battery.

CHECK ACCELERATOR SWITCH ASSEMBLY (See FIGURE 9)

⚠ WARNING

Do not touch the terminals of capacitor C1 of the traction or lift motor controllers. The charge on the capacitors can cause electrical shock and personal injury. Disconnect the battery and use an insulated screwdriver or jumper wire to discharge the capacitors before connecting the voltmeter leads. Make a short-circuit across the capacitor terminals to discharge each capacitor and prevent electrical shocks.

1. Raise the drive tire as described in the **OPERATING MANUAL** or the section **PERIODIC MAINTENANCE, 8000 SRM 528**.

2. Disconnect the battery and remove the key. Open the rear compartment cover.

3. Connect a voltmeter between the TB1 terminal (+) of the traction control card (wire 29) and a battery negative (–) (wire 13). See FIGURE 21. Connect the battery after the voltmeter is connected.

4. Check with the parking brake ON, the key switch ON and the connector to the Monotrol pedal disconnected. When checking a lift truck with a directional control lever, keep the lever in NEUTRAL.

5. Depress the accelerator or Monotrol pedal. The forward or reverse contactor picks up at 3.4 to 3.57 volts.

6. When the pedal reaches the end of pedal travel the reading should be less than 0.6 volts.

7. Check for battery voltage at TB2 on the SCR controller. If battery voltage is not obtained, the MS 1 switch in the accelerator is defective and the accelerator assembly must be replaced. See REPLACEMENT to replace a bad accelerator switch assembly.

8. Lower the lift truck off the blocks. Connect the battery connector.